Texas Instruments DSP Classification

Bibliography

- Texas Instruments „C6000 Teaching Materials”
- Texas Instruments University Programme 2010
- Texas Instruments „DSP Selection Guide”

Texas Instruments' TMS320 family

- Different families and sub-families exist to support different markets.

C2000

Lowest Cost

Control Systems
- Motor Control
- Storage
- Digital Ctrl Systems

C5000

Efficiency

Best MPS per Watt / Dollar / Size
- Wireless phones
- Internet audio players
- Digital still cameras
- Modems
- Telephony
- VoIP

C6000

Performance & Best Ease-of-Use

- **Multi Channel and Multi Function App's**
- Comm Infrastructure
- Wireless Base-stations
- DSL
- Imaging
- Multi-media Servers
- Video

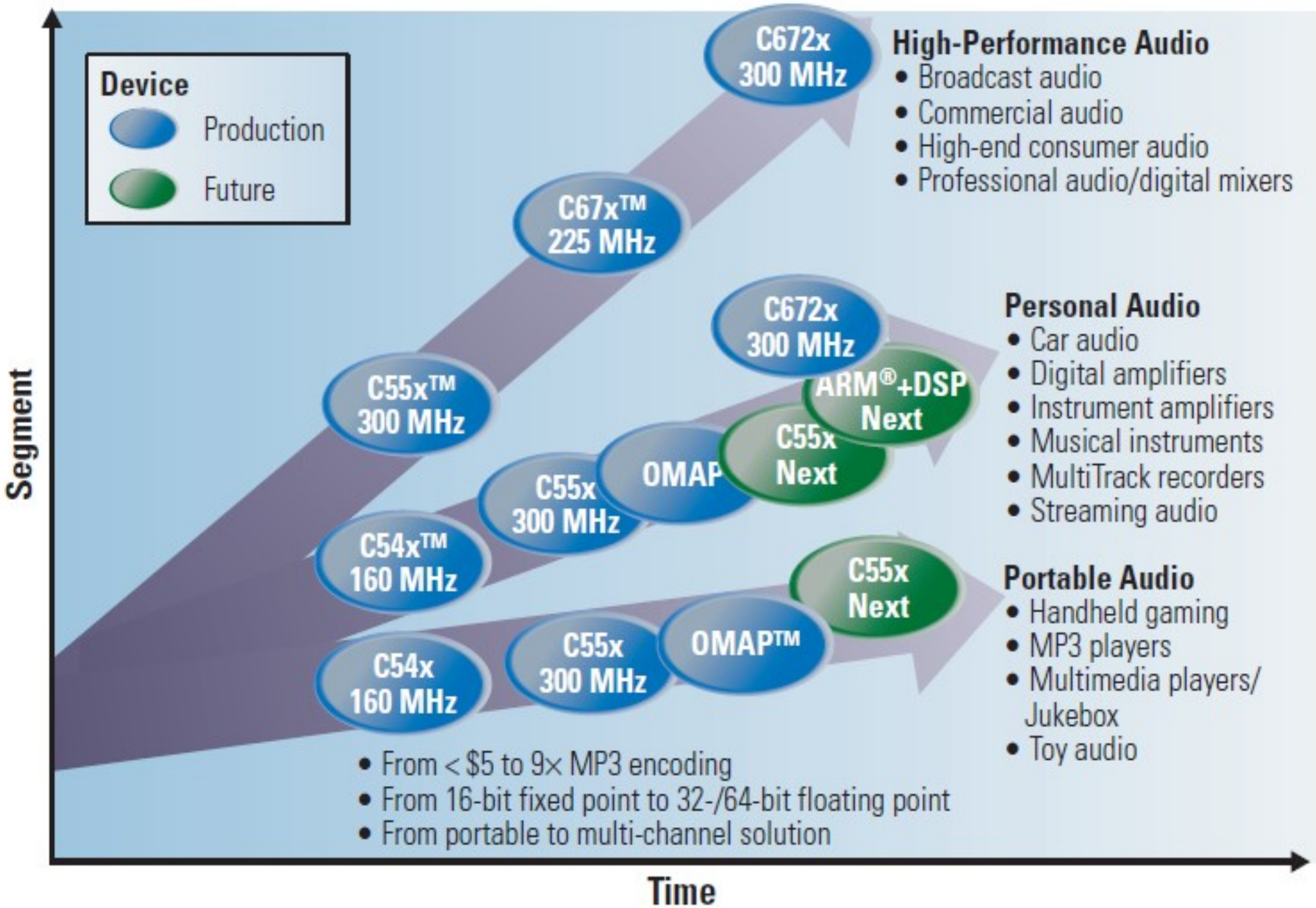

Audio Solutions Roadmap

Texas Instruments Floating-Point Processors TMS320Cxxxx

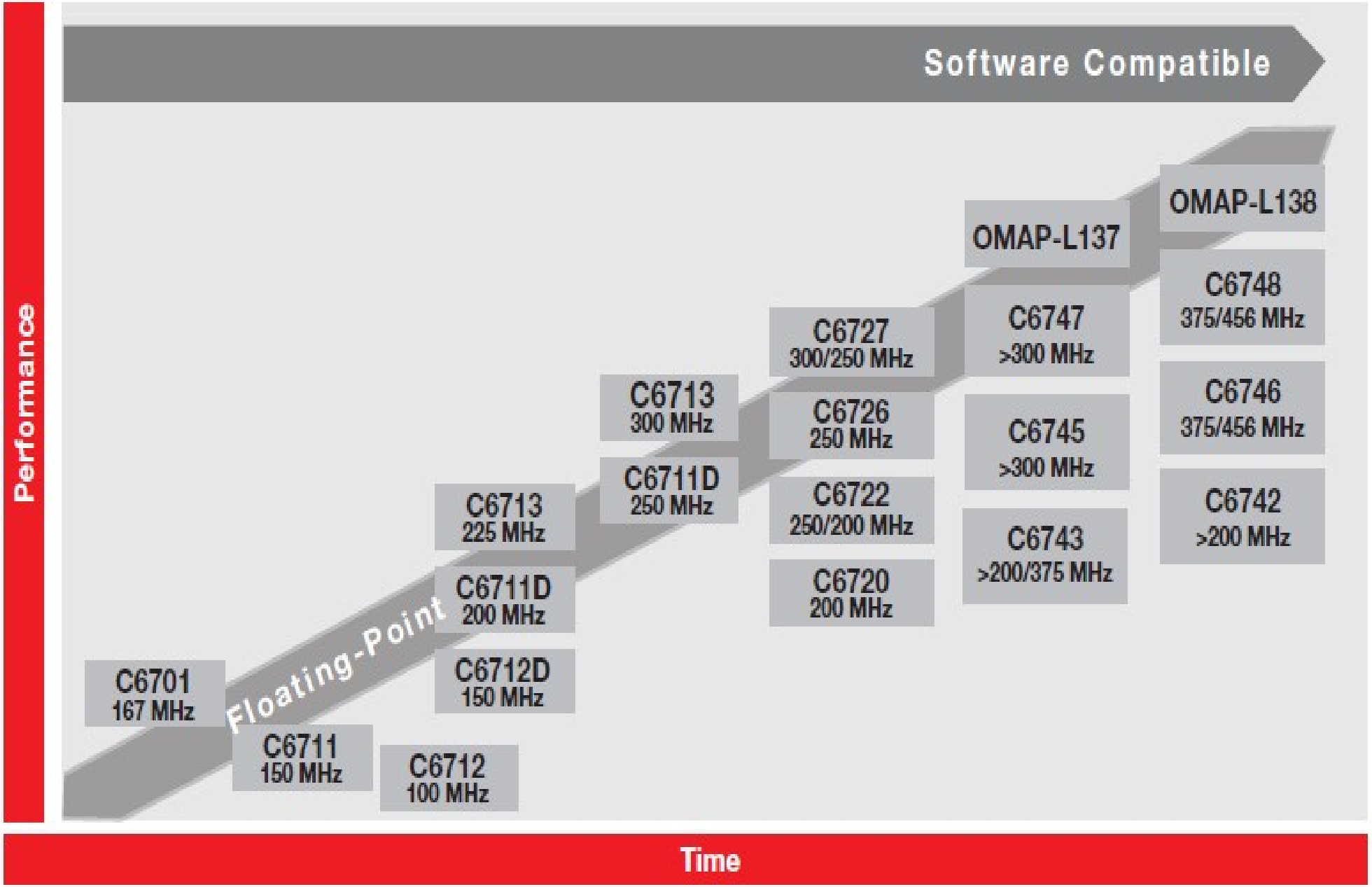

Texas Instruments Floating-Point Processors TMS320Cxxxx

TMS320C67x™ processors, the industry's highest performance floating-point DSPs, offer precision, speed, power savings and dynamic range with performance ranging from 600 to 3648 MFLOPS. These devices are ideal for professional audio products, biometrics, medical, industrial, digital imaging, speech recognition and voice-over packet.

With the new TMS320C674x low-power floating-point processors, designers now have the ability to bring connectivity and more portability to audio applications.

The new OMAP-L13x applications processors combine an ARM9 processor with a floating-point DSP to provide the ability to implement user interfaces or networking stacks.

Key Features

- 100% code-compatible DSPs
- Advanced VLIW architecture
- Up to eight 32-bit instructions executed each cycle
- Eight independent, multi-purpose functional units and up to sixty-four 32-bit registers
- Industry's most advanced DSP C compiler and assembly optimizer maximize efficiency and performance

OMAP-L13x Applications Processors

- Integrate GUIs and/or networking capabilities into portable designs with ARM9 + C674x floating-point DSP
- Operating system flexibility with Linux, DSP/BIOS™ real-time kernel, or WinCE
- Pin-for-pin compatible with TMS320C674x DSP

C674x DSP

- Industry's lowest-power floating-point DSPs
- High precision and wide dynamic range enabled through the 32-/64-bit accuracy of the floating-point DSP core
- Pin-for-pin compatible with OMAP-L13x applications processor

C672x DSP

- Sixty-four 32-bit registers
- Large (32-KB) program cache dMAX DMA engine tuned for audio performance

C671x DSP

- L1/L2 cache architecture
- Thirty-two 32-bit registers
- EDMA DMA engine

Applications

- Professional audio products, mixers, audio synthesis
- Instrument/amplifier modeling
- Audio conferencing
- Audio broadcast
- Emerging audio applications in biometrics, medical, industrial, digital imaging, speech recognition and voice-over packet, musical foot pedals, electronic keyboards

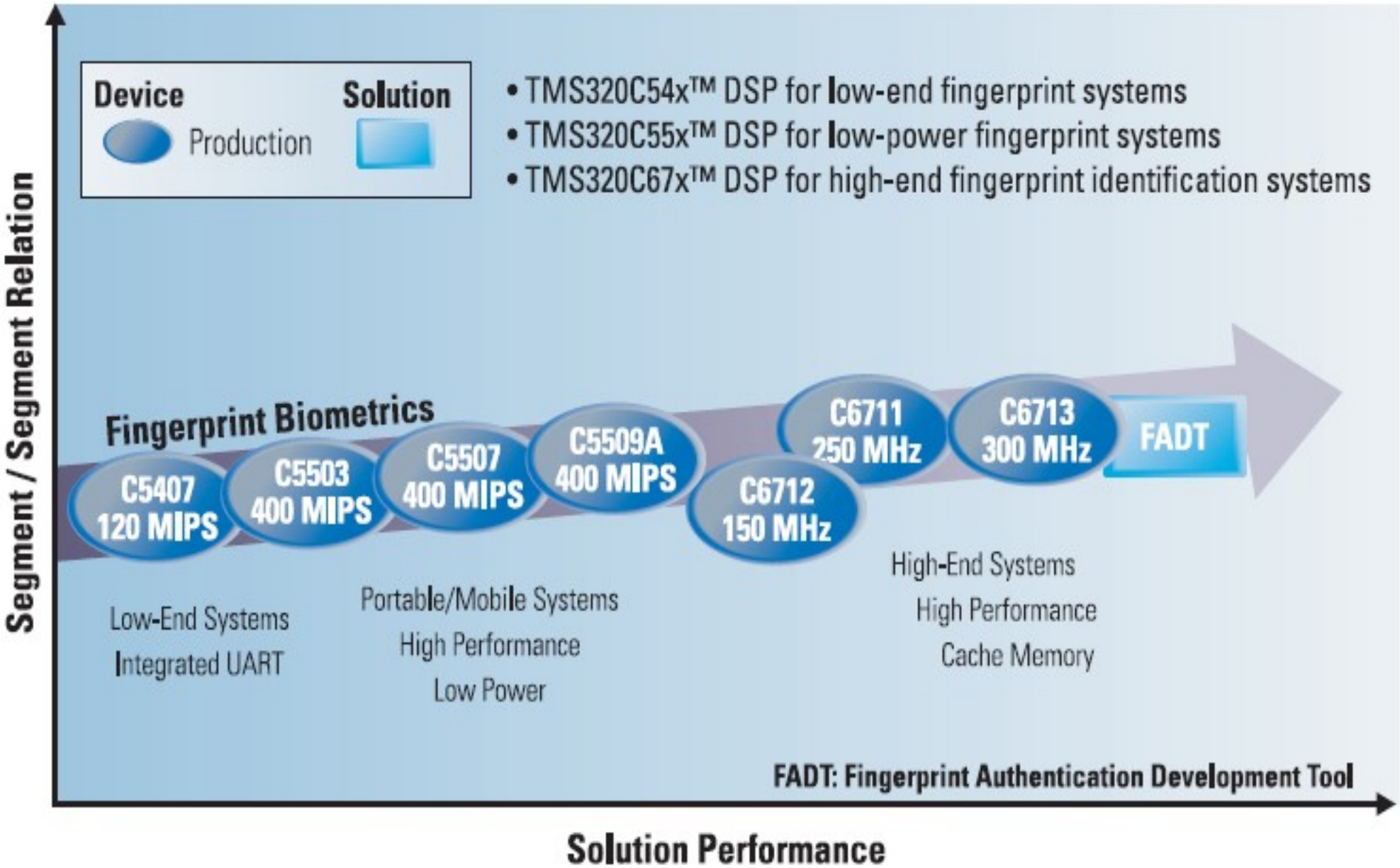

Biometrics Solutions Roadmap

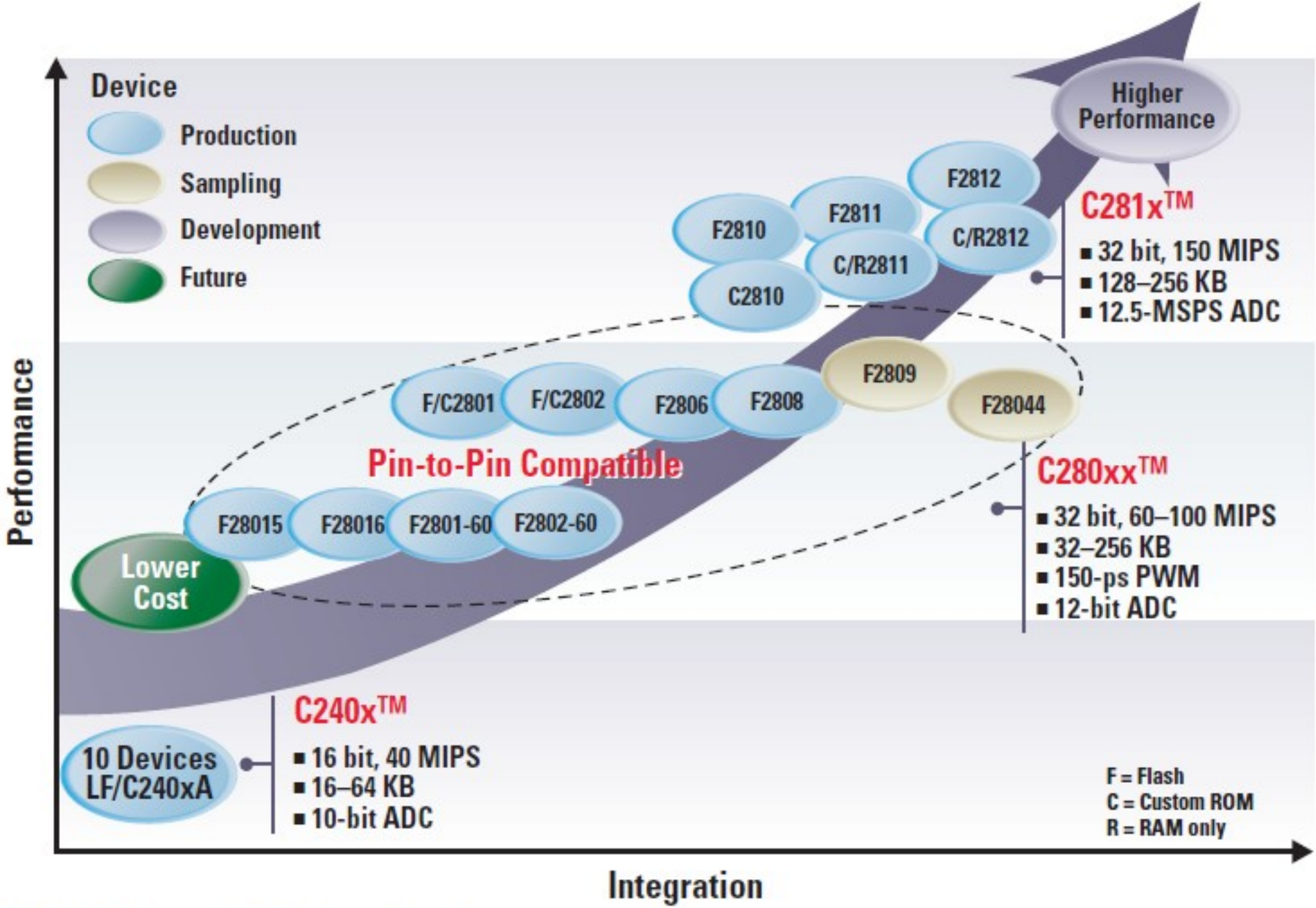

Digital Control Solutions Roadmap

Texas Instruments TMS320C2000™ Microcontrollers

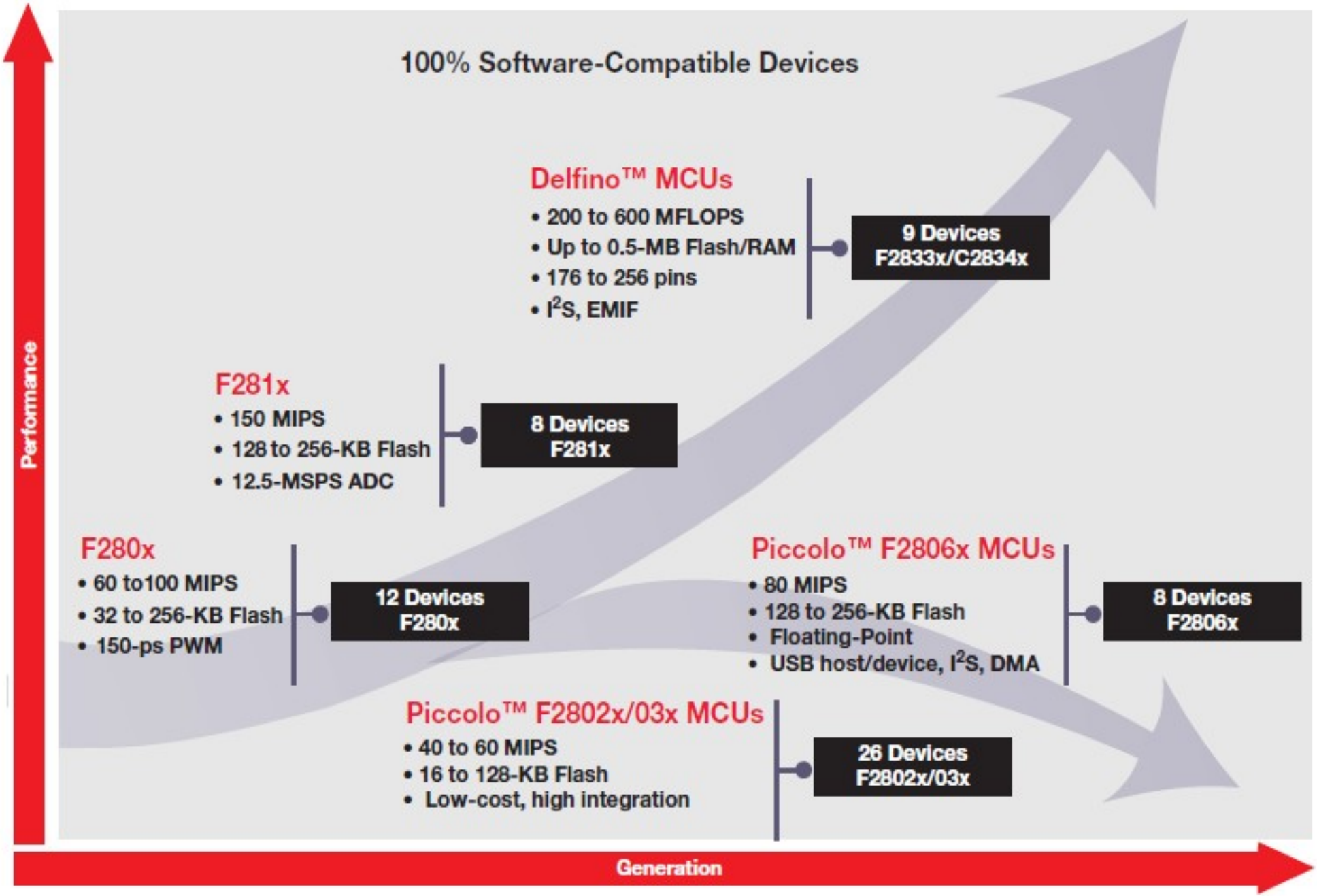

Texas Instruments TMS320C2000™ Microcontrollers

The 32-bit C2000™ MCU family offers up to 300-MHz performance with floating-point capabilities and highly integrated analog peripherals.

Combined with integrated Flash and RAM memory blocks, the C2000 MCU provides a powerful single-chip solution ideal for many audio applications such as Class-D amplifier control and low-latency audio processing.

Specifications

- Single-cycle 32x32-bit MAC
- Only processors with full software compatibility between fixed-point and floating-point
- Full software compatibility across all C2000 platform controllers
- All C28x™ microcontrollers are AEC Q-100 qualified for automotive applications

Key Features

- Robust software library drastically reduces development time
- Best-in-class compiler efficiency
- Low-cost development tools starting at $39

Peripherals

- SCI, SPI, I^2C, McBSP and CAN 2.0b ports
- High-resolution PWM modules with a maximum resolution of 150 ps
- On-chip 12-bit ADC with up to 16 channels and up to 12.5 MSPS

Delfino™ MCUs F2833x/C2834x (with floating point)

- Up to 300 MIPS and 600 MFLOPS for real-time analysis
- Up to 512-KB Flash and 516-KB RAM
- 6-channel DMA support for ADC, I^2S, EMIF

Target Audio Applications

- Class-D amplifier control
- Musical effects
- Low-latency audio processing

TMS320C280xx Digital Power Software Solutions

System	Description	Part Number
DC-DC Buck Converter	DC-DC Buck Converter Using High Resolution ePWM	SPRC229
High-Resolution ePWM	Demonstrates HRPWM Capabilities for Digital Power Applications	SPRC227
Standard ePWM	Demonstrates ePWM Capabilities for Digital Power Applications	SPRC228
Power Factor Correction	Power Factor Correction Software	SPRC307
DC-AC Single-Phase Inverter	DC-AC Single-Phase Inverter Software	SPRC303
Phase-Shifted Full-Bridge DC/DC	Phase Shifted Full Bridge DC/DC Software	SPRC311

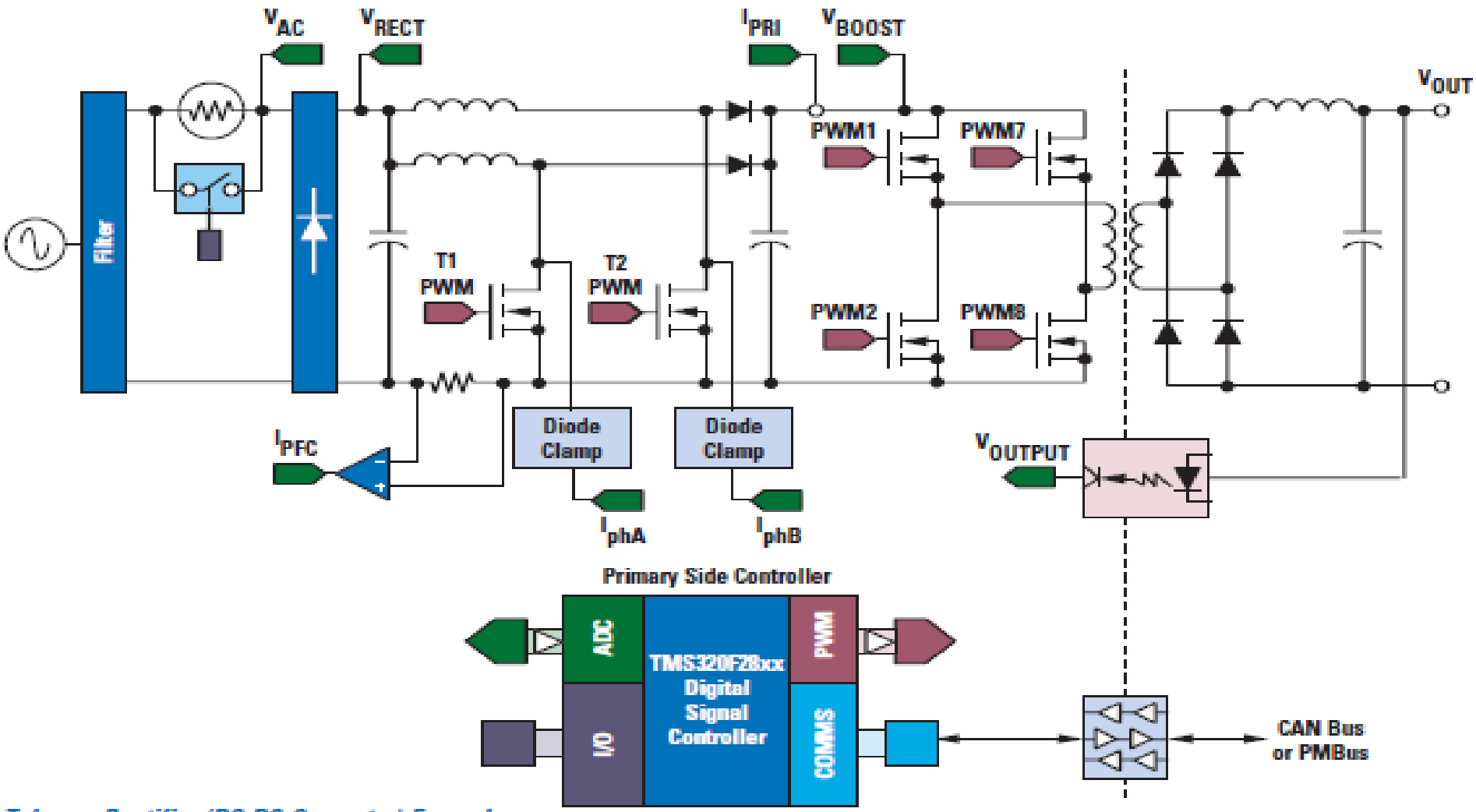

Telecom Rectifier (DC-DC Converter) Example

Power Line Communications Technical Documentation

Application Note	Web Search Literature #
TMS320C2000 Digital Signal Controller Power Line Communication User's Guide	SPRU714

Check the TI website for a complete listing of technical documentation including application notes.

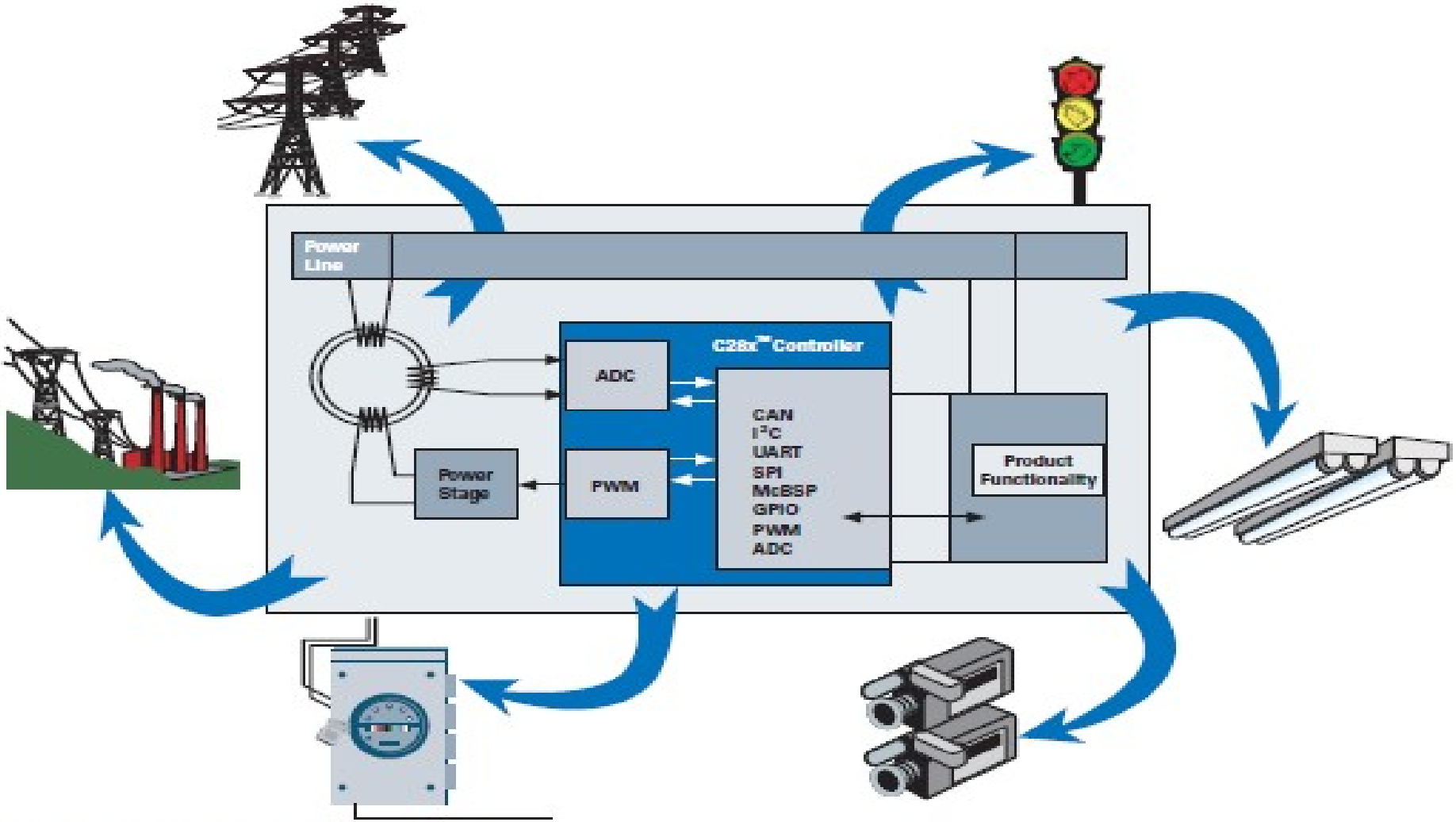

Power Line Communications Implementation

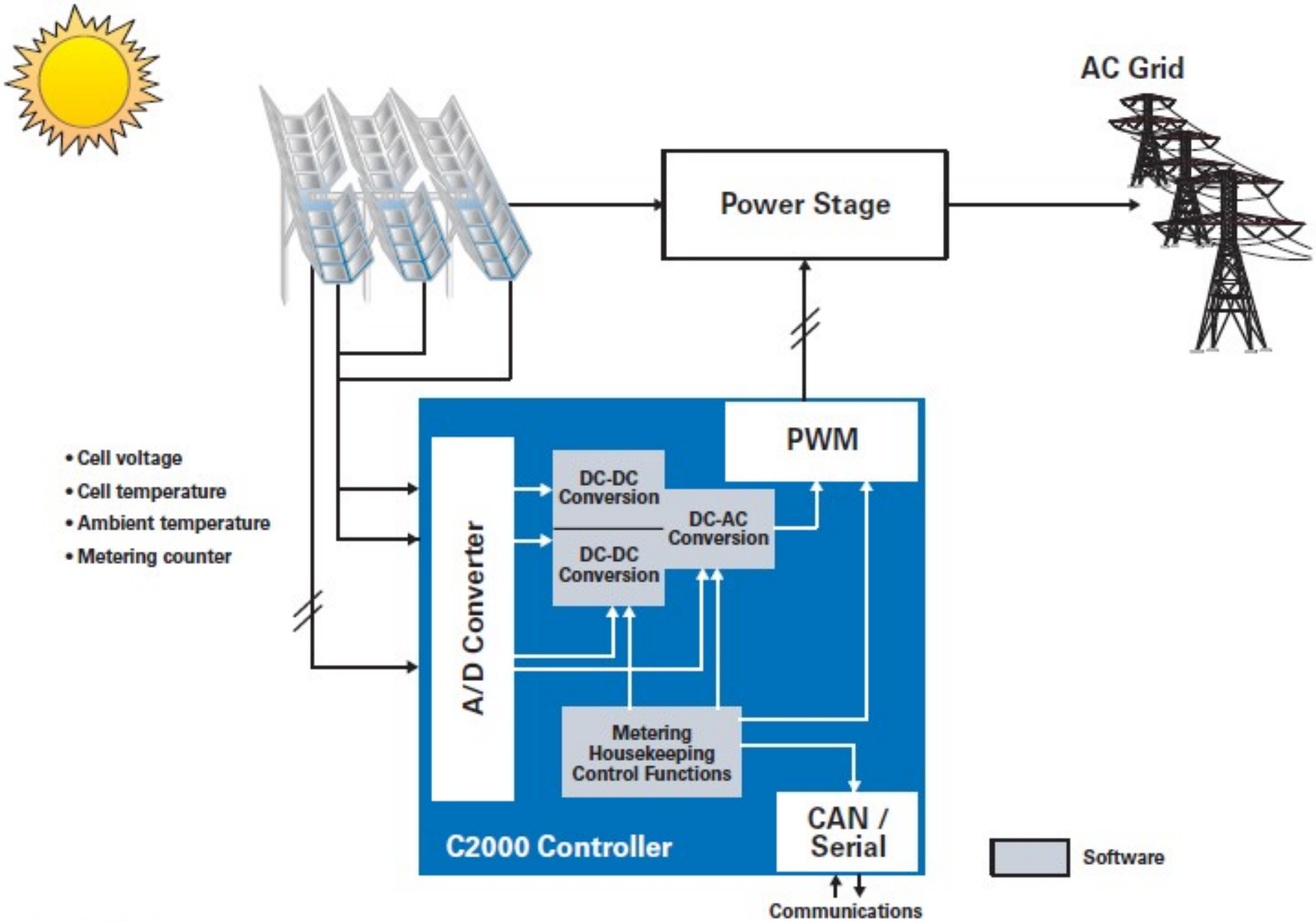

Solar Inverter Example

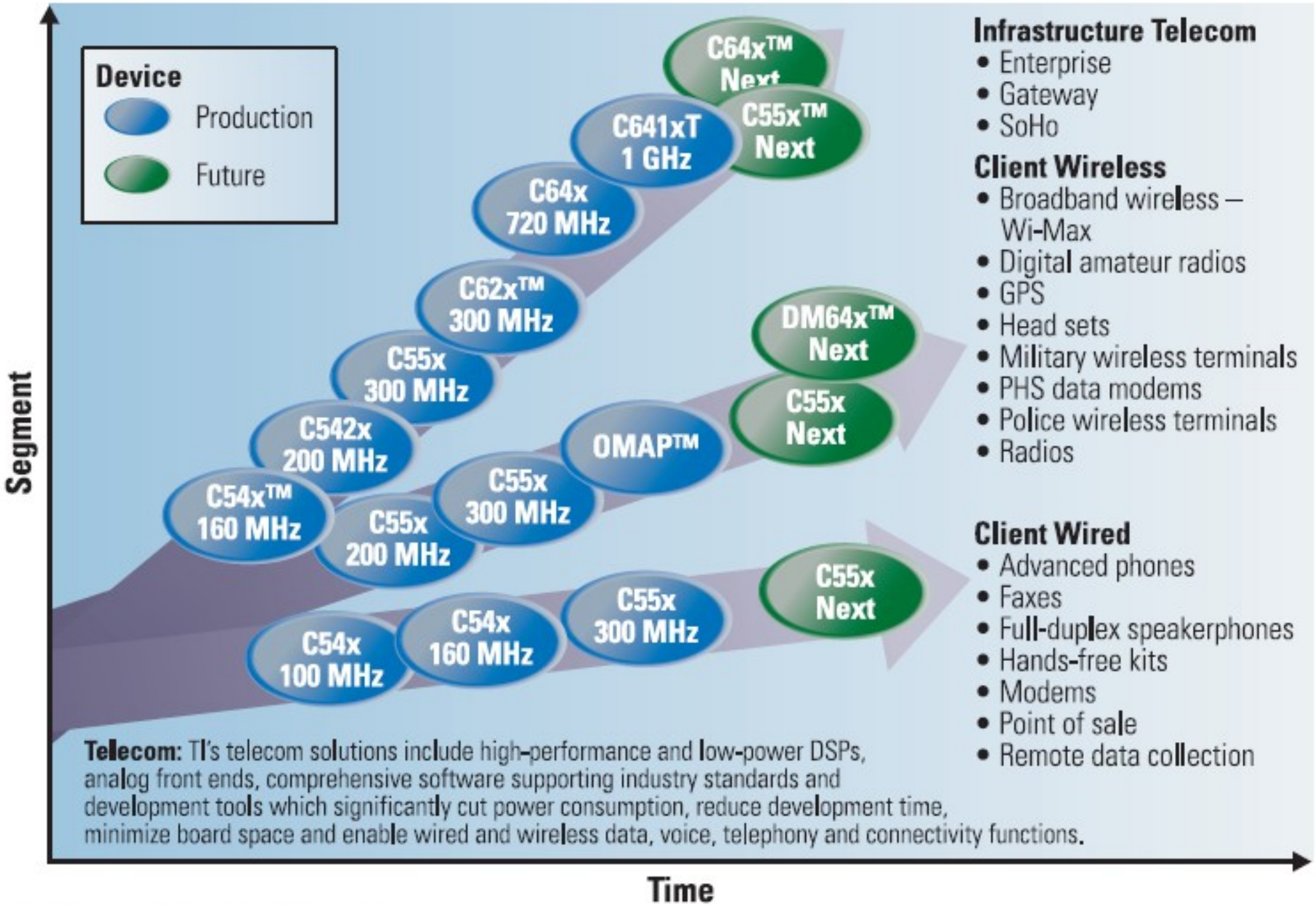

Telecom Solutions Roadmap